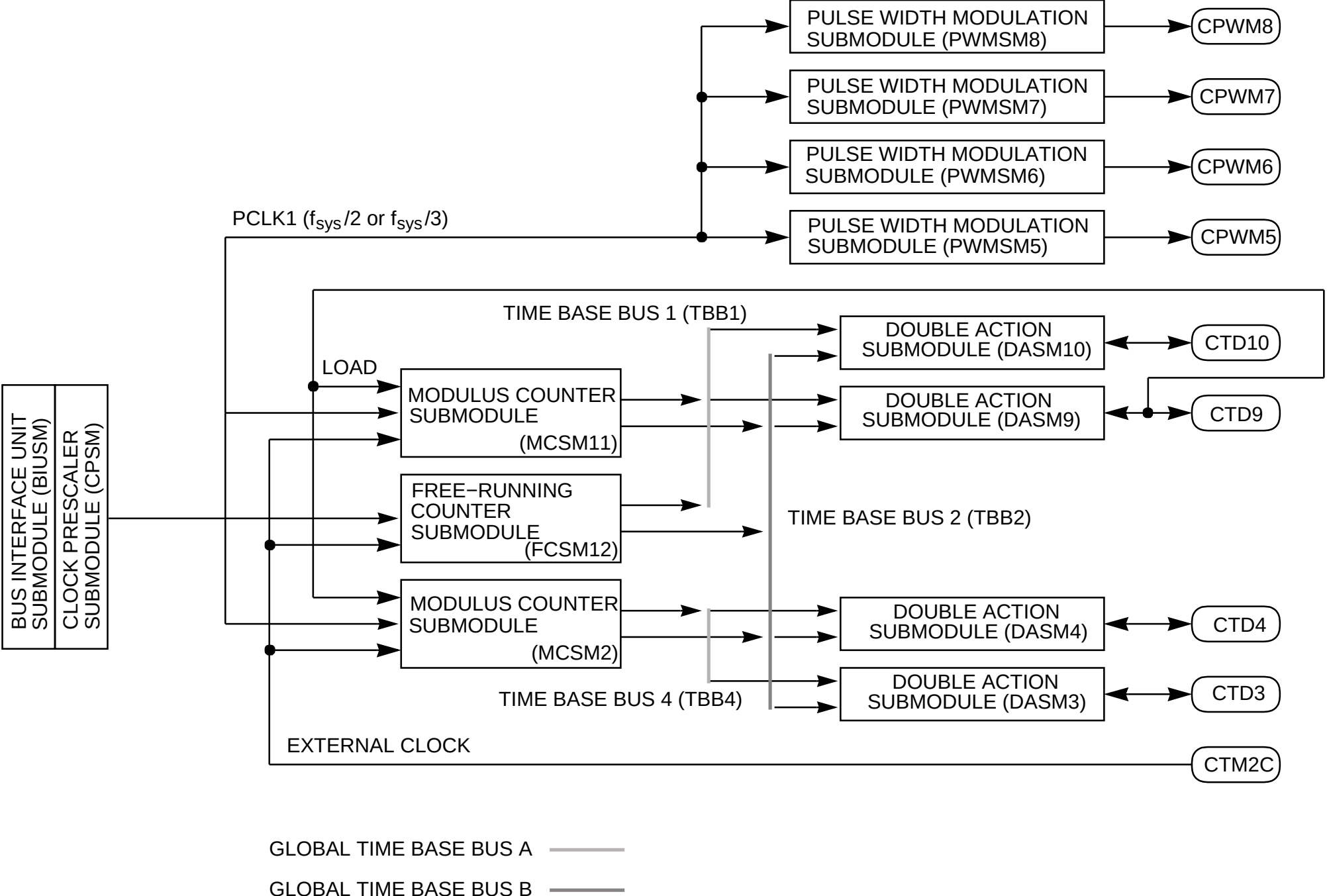
PULSE WIDTH MODULATION SUBMODULE (PWMSM8)
CPWM8
PULSE WIDTH MODULATION SUBMODULE (PWMSM7)
CPWM7
PULSE WIDTH MODULATION SUBMODULE (PWMSM6)
CPWM6
PULSE WIDTH MODULATION SUBMODULE (PWMSM5)
CPWM5
PCLK1 (f_{sys}/2 or f_{sys}/3)
TIME BASE BUS 1 (TBB1)
DOUBLE ACTION SUBMODULE (DASM10)
CTD10
LOAD
MODULUS COUNTER SUBMODULE (MCSM11)
DOUBLE ACTION SUBMODULE (DASM9)
CTD9
BUS INTERFACE UNIT SUBMODULE (BIUSM)
CLOCK PRESCALER SUBMODULE (CPSM)
FREE−RUNNING COUNTER SUBMODULE (FCSM12)
TIME BASE BUS 2 (TBB2)
MODULUS COUNTER SUBMODULE (MCSM2)
DOUBLE ACTION SUBMODULE (DASM4)
CTD4
DOUBLE ACTION SUBMODULE (DASM3)
CTD3
TIME BASE BUS 4 (TBB4)
EXTERNAL CLOCK
CTM2C
GLOBAL TIME BASE BUS A
GLOBAL TIME BASE BUS B