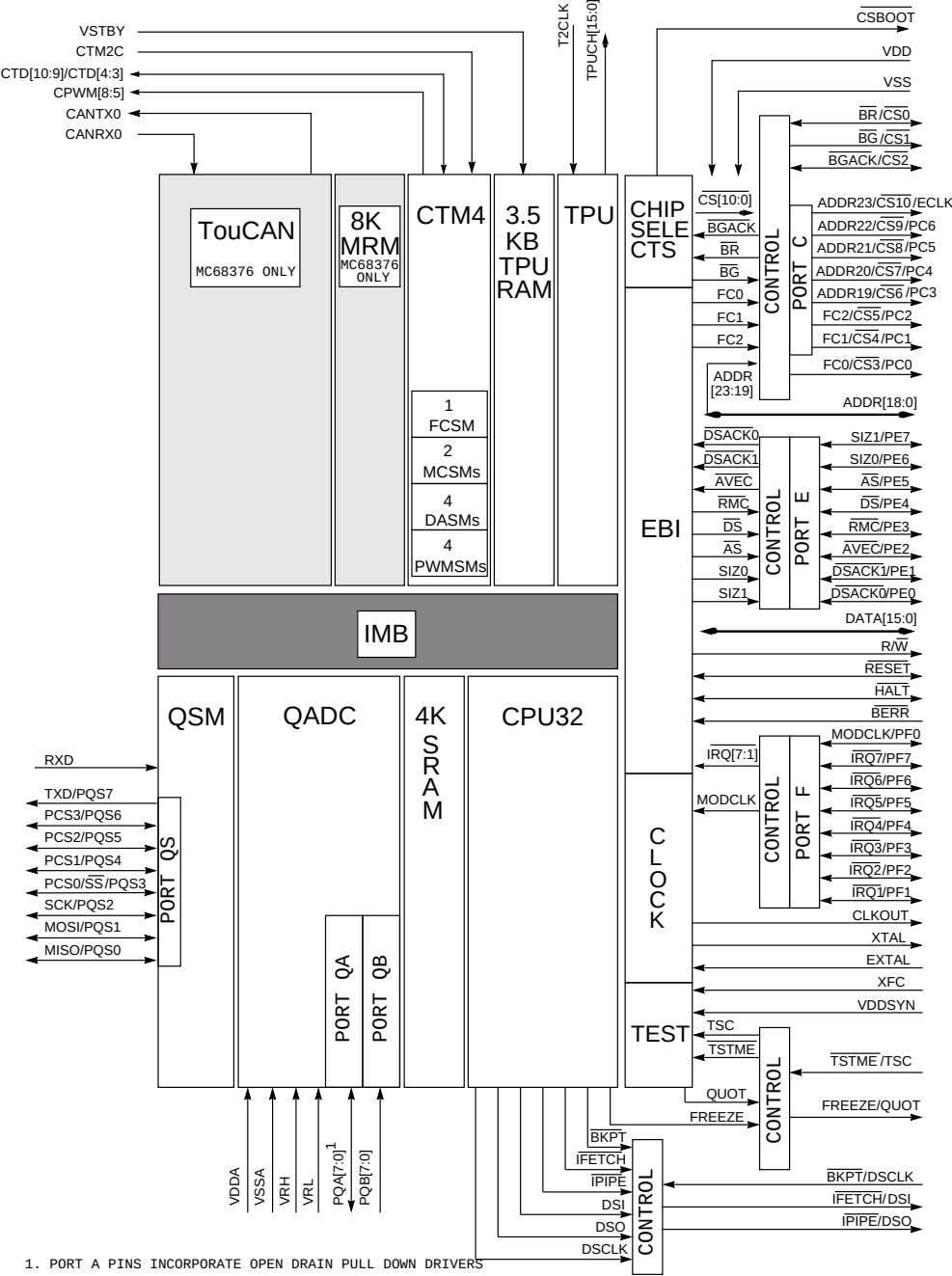

1. PORT A PINS INCORPORATE OPEN DRAIN PULL DOWN DRIVERS